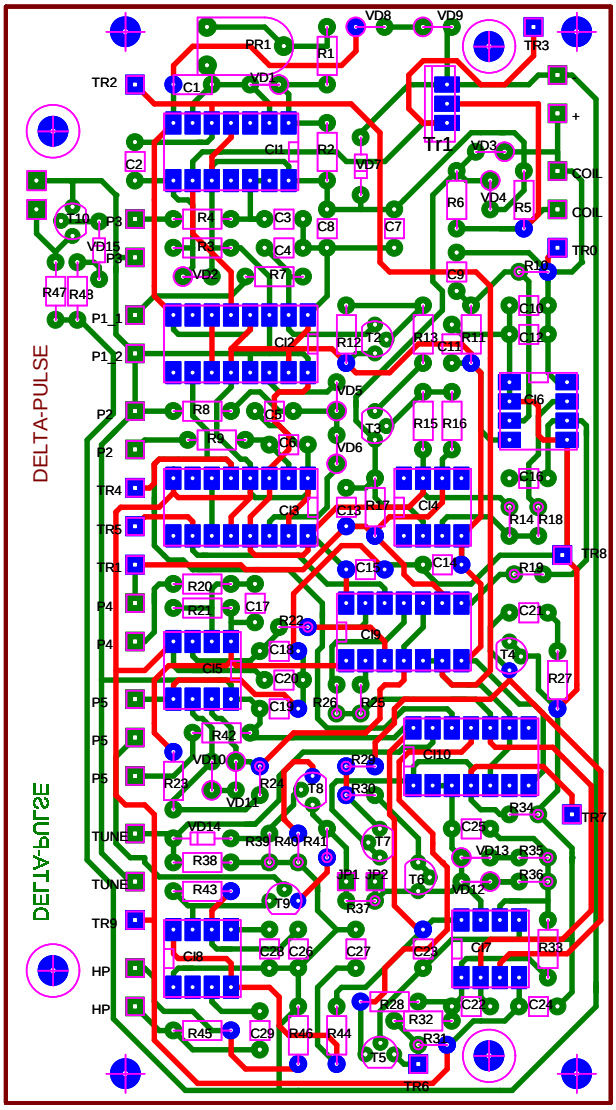
DELTA-PULSE
DELTA-PULSE
Tr1
TR1
TR2
TR3
TR4
TR5
TR6
TR7
TR8
TR9
TR0
TUNE
TUNE
HP
HP
P1_1
P1_2
P2
P2
P3
P3
P4
P4
P5
P5
P5
+
COIL
COIL
VD1
VD2
VD3
VD4
VD5
VD6
VD7
VD8
VD9
VD10
VD11
VD12
VD13
VD14
VD15
PR1
R1
R2
R3
R4
R5
R6
R7
R8
R9
R10
R11
R12
R13
R14
R15
R16
R17
R18
R19
R20
R21
R22
R23
R24
R25
R26
R27
R28
R29
R30
R31
R32
R33
R34
R35
R36
R37
R38
R39
R40
R41
R42
R43
R44
R45
R46
R47
R48
C1
C2
C3
C4
C5
C6
C7
C8
C9
C10
C11
C12
C13
C14
C15
C16
C17
C18
C19
C20
C21
C22
C23
C24
C25
C26
C27
C28
C29
T2
T3
T4
T5
T6
T7
T8
T9
T10
CI1
CI2
CI3
CI4
CI5
CI6
CI7
CI8
CI9
CI10
JP1
JP2